SPRUCE Enclosure Corral and Sump System: Description, Operation, and Calibration

Stephen D. Sebestyen, USDA Forest Service, Northern Research Station, Grand Rapids, MN, 55744

Natalie A. Griffiths, Oak Ridge National Laboratory, Climate Change Science Institute and Environmental Sciences Division, Oak Ridge, TN, 37831-6301

Please reference this document as:

Sebestyen, S.D., and N.A. Griffiths. 2016. SPRUCE Enclosure Corral and Sump System: Description, Operation, and Calibration. Climate Change Science Institute, Oak Ridge National Laboratory, U.S. Department of Energy, Oak Ridge, Tennessee, U.S.A. http://dx.doi.org/10.3334/CDIAC/spruce.030

For more information:

Contact either Dr. Sebestyen (ssebestyen@fs.fed.us) or Dr. Griffiths (griffithsna@ornl.gov) for additional information.

SRPUCE Project information available at mnspruce.ornl.gov.

SPRUCE Enclosure Corral and Sump System: Description, Operation, and Calibration

Table of Contents:

- Introduction
- Objectives
- Corral Components
- Sump Components
- Calibration
  - Calibration Equipment
  - Calibration Procedure
  - Calibration Curves
- References
- Appendix I
  - Field Data Form

Document Version Log:

Version Date	Changes Made
June 29, 2016	First posted version -- August 29, 2016

Introduction

A subsurface corral system for each enclosure isolates the movement of water from the surrounding bog into the enclosed area of the experimental plot and, in combination with the sump system, measures the outflow and collects water samples at each experimental chamber within the SPRUCE Project (https://mnspruce.ornl.gov). These measurements are critical to the calculation of whole-ecosystem water, carbon, and solute fluxes. This document provides a description of the components, operation, and calibration of the corral and sump system.

Objectives

1. Describe the sump system and the operation of the sump system, which is used to calculate the volume of water that is pumped from a naturally draining enclosure and to trigger automatic collection of water samples.
2. Describe the calibration between water level and water volume in the sump system (Figure 1). This relationship is used to calculate near-surface lateral runoff ("outflow" in L/s) from each enclosure by measuring the change in water level over time. The water volume vs. water level relationship must be re-calibrated if water level sensors (or components) are replaced.

Diagram of the sump system.

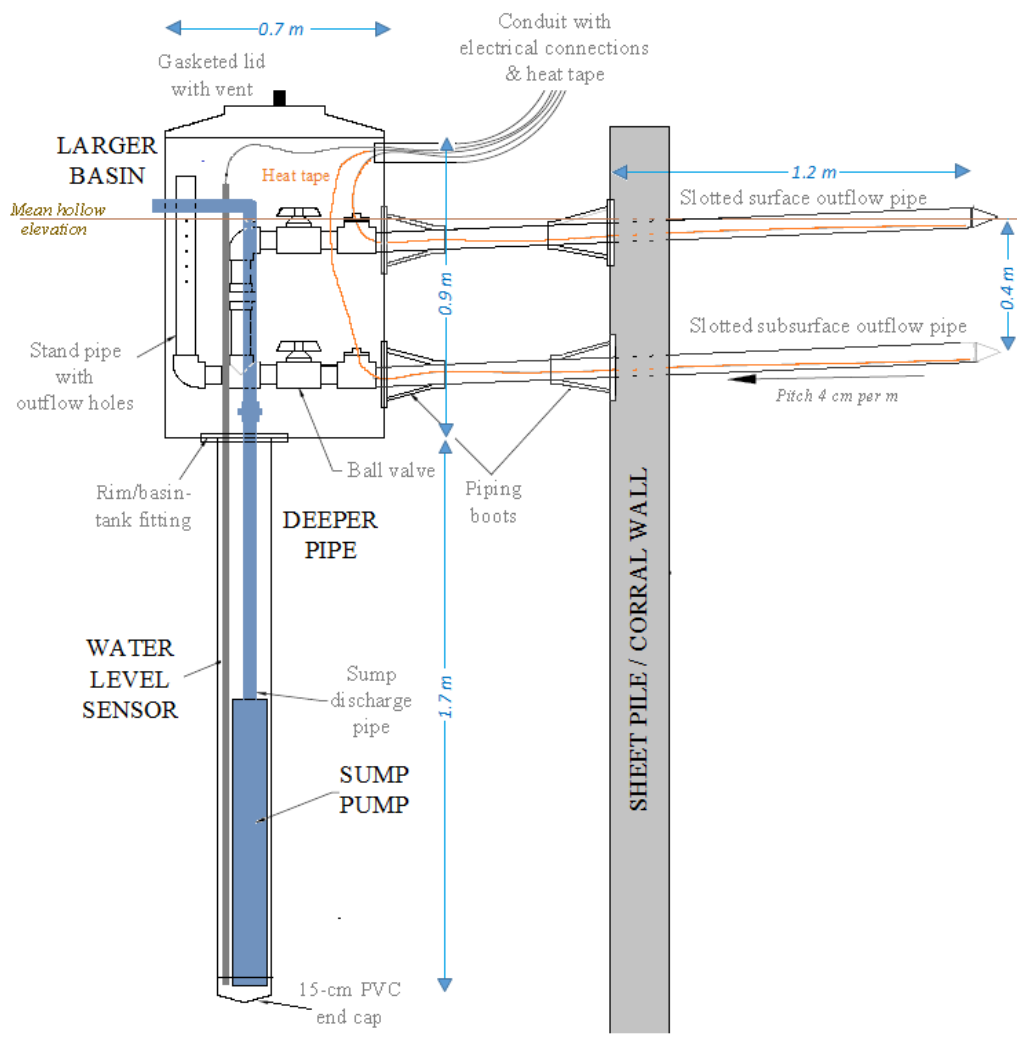

Corral Components

- A belowground corral (Everlast vinyl sheet pile with Pro-Seal 34 sealant and Pro-Seal Flash Guard Tape) isolates the movement of water from the surrounding bog into the enclosed area of a plot. Sheet piles were driven through peat into underlying tills, unless the peat was too deep. About 0.5 m of each sheet pile sticks aboveground.

  Before installation, peat depths were probed to estimate the needed lengths, and sheet piles were pre-cut from the original 3.0 m lengths when peat depths were less than 2.5 m deep.

  The sheet piles interlock, with 10 to 11 panels on each side of an octagonal corral. Pro-Seal 34 was injected into the female interlocking groove prior to the mechanical driving of a panel into the peat. Upon contact with water, the sealant expanded to fill each joint. As a further measure to seal the belowground corrals, ~30-cm lengths of Pro-Seal Flash Guard Tape were applied to the outside of each joint, roughly centered above- and belowground where joints intersected peat surfaces.

  The inside edge of belowground corral is outside the footprint of the aboveground enclosure, which allows rain falling on the frustrum of the aboveground chamber to drip into enclosure.

  Belowground corrals were installed during the 2014-2015 winter.

Materials specifications

Material	Product info
Everlast vinyl sheet pile	product number EP31G1120, 0.6-cm thick, http://everlastseawalls.com/seawall-products/vinyl-sheet-piling/
Pro-Seal 34	A single component M34 elastoplastic, polycarbon/polycarbonate sealant that elongates by 1200% during contact with water and curing, http://www.prosealproducts.com/productDisplay.asp-id=185.html, applied inside panel joints
Pro-Seal Flash Guard Tape	http://www.prosealproducts.com/productDisplay1.asp-id=374.html

Peat depths (meter) by experimental enclosure.

Plot#	Side								Mean depth
	N	NE	E	SE	S	SW	W	NW	
4	2.9	3.1	3.4	3.65	3.5	3.1	2.8	2.26	3.1
6	2.9	2.8	2.5	2.7	2.5	2.7	2.8	2.8	2.7
8	1.9	2.6	3	3.2	2.8	2	1.8	1.85	2.4
10	3.2	3.3	2.4	3	3	2.8	2.4	2.8	2.9
11	2.8	2.4	2.4	3.3	3.1	2.2	3	2.5	2.7
13	2.1	2.9	3	3.1	2.9	2.7	2.4	2.3	2.7
16	3.5	2.6	2.4	2.6	2.8	2.9	2.4	2.4	2.7
17	2.7	2.5	2.3	1.9	1.8	1.7	2.0	2.5	2.2
19	2.8	3.1	3.0	2.5	2.0	1,8	1.9	3.3	2.5
20	4.1	4.4	4.3	3.4	2.9	3.0	3.7	4.1	3.7

Measurements courtesy of PJ Hanson and D Todd.

Diagrams showing cross-sectional dimensions of an individual sheet pile (left) and a universal corner (next image to the right), and a single piece of sheet pile (far right).[1]

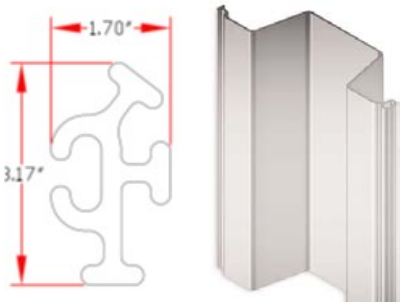

Photo showing construction of the below-ground corral on plot 13. The sheet pile is outside of the octagonal boardwalk and the aboveground chamber was later built between the boardwalk and the sheet pile.

Photo of sealed sheet piles.

Sump Components

- The sump system includes a larger polyethylene basin and a deeper pipe that is capped on the bottom. The deeper pipe holds about 25 L of water before water starts to accumulate in the larger basin. The volume of a larger basin when filled to the lowest hole in the stand pipe is about 75 L and about 275 L if allowed to completely fill to the peat surface. About 60 cm of the larger basin is below the peat surface. A removable lid on the larger basin is gasketed to prevent inflow of water if a sump was overtopped by abnormally high water in the bog. The lid of each sump has an anti-siphon vent. Sumps were installed during July and August 2015.

Materials specifications

Material	Product info
Larger basin	90 cm H. x 65 cm polyethylene basin, FlexWorks PSL-3630, http://www.opwglobal.com/products/us/retail-fueling-products/below-ground-products/piping-containment-systems/tank-transition-special-application-sumps/special-application-sumps-extensions.
Deeper pipe	170-cm x 15-cm internal diameter (ID) SCH-80 PVC pipe.
Vent	Sioux Chief Manufacturing, 3.8-cm diameter anti-siphon auto vent, catalog number 239, http://www.gotomahawk.com/ products/plumbing-specialty/lav-sink-specialties-and-repair/other-lav-sink/anti-siphon-auto-vent.

[1] Images taken from http://everlastseawalls.com/wp-content/uploads/2012/12/esp-3.1-spec-sheet.pdf or http://everlastseawalls.com/wp-content/uploads/2012/12/esp-universal-corner.pdf.

Photo of a sump basin prior to construction of access docks around the sump.

Photo of a sump system prior to installation.

Photo of a dock that surrounds and allows access to a sump basin (sump/enclosure 13). The photo also shows an autosampler, which houses a CR1000 datalogger/controller that measures the water level and operates the sump pump.

Photo showing the bottom of a large polyethylene tank and the transition (gray ring in right center of the photo) to the deeper, 15-cm ID PVC.

- Water inside a plot may drain into one of two 120-cm long by 5-cm internal diameter (ID) slotted SCH-40 PVC pipes. The horizontal drain pipes shallowly slope (pitch of 1.25 cm per 30 cm) towards a sump basin. One pipe allows surface water to flow from the enclosed plot when the water level rises above the hollow surface. A second pipe, 37.5 cm below the surface pipe allows subsurface flow from an enclosed plot. Outside of a sheet pile corral, all pipe, connections, and valves are 5-cm ID diameter SCH-80 PVC. Each pipe has a ball valve inside the sump to shut off drainage from an enclosed plot and heat tape to preclude freezing. Down-flow of the ball valves, the pipes merge. Water from the drain pipes flows into the sump through six 0.6 cm diameter holes in a vertical stand-pipe. The top hole was drilled at the mean elevation of hollow surfaces inside an enclosure (REF[2]) with additional holes drilled at 5-cm intervals from 0 to 25-cm below the mean hollow elevation. All pipe connections are threaded and sealed with PTFE tape.

  During winter and snow melt, the ball valve on the surface drain should remain open to allow drainage over frozen soils and to prevent surface ponding during melt. After

[2] Add reference to forthcoming metadata and data on mean hollow elevations in plots.

concrete soil frost melts, the valves should be almost completely closed to prevent unrealistic, rapid drainage of standing water. The valves should be closed to the point that resistance is felt, but the valve is still slightly open. This restriction to flow is intended to limit surface outflow during unfrozen periods when surface runoff would typically be limited by backing up of surface water in the interconnected, yet slowly draining hollows.

Photo showing the slotted surface drain pipe that allows water to flow from an enclosure. The sheet pile runs from top to bottom in the center of the photo. The sump is on the far left of the photo. The pipe between the sheet pile and sump is not slotted. The aluminum frame of the enclsoure is to the right of the sheet pile. Photo from sump/enclosure 20, prior to construction of docks around the sumps and addition of the greenhouse glazing in the walls of the enclosure.

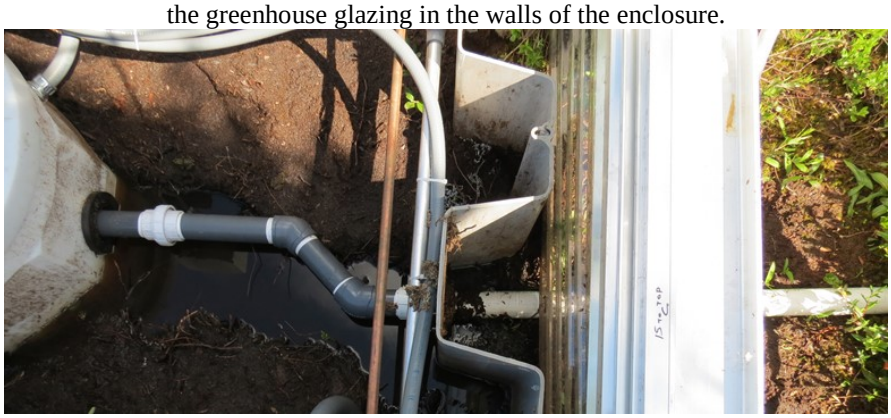

Photo of the sump interior. The surface outflow pipe is visible to the right on the outside of the sump basin.

Photo of the sump interior. The stand pipe is the vertical pipe on the far upper left. The blue handle of a shutoff valve for the surface outflow pipe is visible near the middle of the photo.

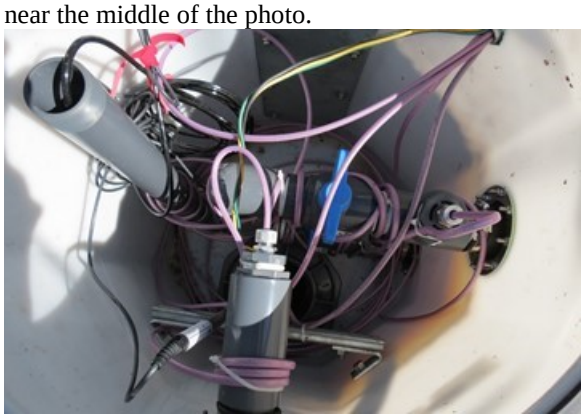

- A wooden dock was built adjacent to or surrounding each sump. Docks were built of pressure treated dimensional lumber, with 2x10” frames and 2x6” decking. The docks provide access to the sumps and piping, and support autosamplers that are used to: 1) measure and control water levels/sump volumes and 2) collect composited water samples from each sump for chemical analysis.
- A TruTrack Water and Temperature Voltage Output sensor with an interface having an RS-232 port is used to measure water level in the sump system. Each 2.0-m long WT-VO sensor rests on the bottom PVC end cap of the sump system and extends to nearly the top of the sump basin. The sensor output is 0-2000 mV DC, which scales linearly relative to

water height on the sensor. There is a 10-cm long segment at the bottom of each sensor that does not respond to water height.

Voltage from a WT-VO is measured every one second and recorded on a datalogger inside of an adjacent autosampler cabinet. Water volume in a sump is calculated using a linear equation that relates voltage and measured volume of water.

Materials specifications

Material	Product info
TruTrack Water and Temperature Voltage Output sensor	WT-VO 2000, http://www.trutrack.com/wt-vo.php
Campbell Scientific composite stationary outdoor automatic liquid sampler	BVS4300C-S3-R-3-G-NP-H-S-NCF-NE-N, 3/8” ID system, small refrigerator, insulated NEMA3R cabinet, cabinet circulation fan, heater c/w thermostat, integral battery with charger, 0.5L acrylic chamber, 20L Nalgene bottle.
Campbell Scientific CR1000	https://www.campbellsci.com/cr1000

- A sump pump in the 15-cm deeper pipe is used to remove water when the sump system fills. Sump pumping is triggered when the volume of water exceeds a threshold value (currently set at 24.5 L). The datalogger records volumes at when pumping starts and ends. The pumped volume is calculated as the difference between the volume at the start and end of pumping and volumes of pumped water are summed for each day and month. Pumps were installed with the sump system, but not operated until the dataloggers and control systems were completed in March 2016. Ball valves on inflow pipes were opened between March 2 to 4, 2016 to allow enclosure drainage as control programs were sequentially loaded and tested for each sump.

  NOTE: Sumps were originally intended to restrict filling to the deeper 15-cm pipe under low flow, while letting water rise into the larger basin during high flow. Measurements in the 15-cm diameter portion of the sump would be more accurate than measurements in the sump tank. At fast flow rates, the deeper pipe may have filled too quickly and the sump pump may have caused excessive pump use and unnecessary wear on the pump. As such, water was intended to flow into the larger basin at high flow rates. However, it was noticed that the sump calibrations were unstable over time, which corresponded to changing water tables in the bog. SDS suspected the tank was buoyant and rising and falling with changes in bog water table, or that the volume of the large tank decreased as hydrostatic pressure cause greater inward deflection of larger basin walls and overall compression of the volume of the larger basin. Since the WTVO vs. volume relationship was not consistent, filling was restricted to the 15-cm PVC section where the calibration would be more stable and the breakpoint transition into the tank no longer mattered to volume calculations. While capacity for high flow measurement was originally thought desirable from an operations standpoint, restricting pumping to the 15-cm PVC sump now seems fine. Inflow rates of >2 L min-1 were infrequent during high flow periods, such as snowmelt. Under such flow conditions, the water height measurement system was more than adequate for measuring water levels at the resolution of 0.1 L and the pump was not be overly burdened by the frequency of pumping under the observed ranges of inflow rates from March to June 2016.

  The dataloggers and control systems to trigger sump operation were first powered in March of 2016.

Materials specifications

Material	Product info
Simer sump pump	Model 2845G, 115 V 1/2 HP, 2-wire submersible well pump. The pump is rated at 54 L min^{-1}.

- To prevent freezing and damage to sump components, heat tape was placed in horizontal segments of inflow and outflow pipes; wrapped around the exterior of the standpipes, ball valves, pumps, and vertical pump outflow pipes; and draped throughout the interior of the larger basin. Heat tape is manually turned on and off at the 120-V electrical panel and only energized during periods when freezing is expected.

Materials specifications

Material	Product info
Arctic Trace Heat Tape	Arctic Trace submersible heat tape, TL series, 5 watt/ft at 120 volt AC, with ETFE overjacket, model no. Z120512CBTL/TEZ,

Calibration

The calibration is performed to establish the relationship between voltage (mV) output of the TruTrack Water and Temperature Voltage sensor and water volume (L) in the sump. Two calibration curves were determined for each sump: one for the 15-cm pipe, and one for the larger basin.

- The sensor output (0-2000 mV DC) scales linearly relative to water height on the sensor.
- Calibration curves were determined by repeated removal of a measured volume of water and recording the sensor output voltage.
- The result is a linear equation of voltage and measured volume of water.

Water volume in a sump is calculated using the linear equation that relates voltage and measured volume of water.

Calibration Equipment

1. A Bosworth Company Guzzler self-priming, diaphragm hand pump with check valves and flexible 0.8 to 1.3-cm ID tubing to manually remove water from the sump system.
2. Graduated containers, either a 1-L graduated cylinder or 2- to 10-L graduated beaker, to measure volumes of water that were pumped from the sump system.
3. Field data sheets to record measurements and observations (Appendix 1).
4. A computer with RS-232 port and RS-232 cable connected to the RS-232 port on the WT-VO interface, an Archer Field PC with an RS-232 cable connected to the RS-232 port on a Campbell Scientific CR1000 datalogger in the CO_2 data acquisition panel (Krassovski et al., 2015), or a wireless connection via LoggerLink to the CR1000 in a Campbell Scientific BVS-4300C-SC-NF-NP-H-S autosampler. Any of these connections can be used to read the voltage output from the WT-VO sensor.
5. Water level sensor.

Equipment specifications

Equipment	Product info
Bosworth Company Guzzler self-priming, diaphragm hand pump	http://www.thebosworthco.com/bselectp.php
Archer Field PC	http://www.junipersys.com/Juniper-Systems-Rugged-Handheld-Computers/products/Archer-2
Campbell Scientific LoggerLink	https://www.campbellsci.com/loggerlink, version 1.3.2 or subsequent updates.
Durham Geo Slope Indicator water level indicator, or equivalent	http://www.durhamgeo.com/Ground-Water/water-level-indicator.html, 30 m water level indicator with 1-cm increments, 51690303

Calibration Procedure:

1. Electrical power to a sump pump was turned off at a 120-V circuit breaker to prevent water from being automatically pumped out of a sump.
2. The sump valves were opened and water from the enclosure was allowed to drain into the sump. The sump was filled with water to the lowest drainage hole in the stand pipe.
3. The water level in the sump was measured using a TruTrack Water and Temperature Voltage Output sensor. Water level was measured as WTVO (in mV), and the TruTracks themselves were not calibrated as the mV output only was being measured.
4. After the water level of the sump (filled to about the 25-cm depth below hollow hole in a stand pipe) was measured, water was manually pumped out of a sump and measured in graduated beakers (2, 3, or 10 L) or a 1-L graduated cylinder. Withdrawn water volumes typically ranged from 6-15 L. Water level was measured every time that volumes were recorded. About 10 measurements were completed before the larger basin was emptied and the water level had reached, but not dropped below the rim of the 15-cm pipe.
5. The pump and measurement process was continued to determine a volume-WTVO relationship for the 15-cm pipe, as described above. Approximately 10 measurements were carried out, with 2-3 L pumped out between each measurement.
6. When all of the water was pumped out of the sump, the final volume and WTVO were recorded.

Calibration Curves:

1. The calibration is the linear relationship between voltage (mV) and water volume (L) in the sump. Two calibration curves were calculated for each sump: one for the 15-cm pipe, and one for the larger basin (Figure 6).
2. Re-calibrations will occur:
   a. Yearly (initially) to determine if the calibrations changed (e.g., due to compression or heaving of the sump, sensor instability).
   b. If the water level sensor or interface fail and a new sensor or interface is installed.

Example calibration curve from Plot 19. Blue symbols show data points collected in the field, and the black line is the calibration curve calculated from the slope and intercept of each line. The shallower part of the curve is for the 15-cm pipe, and the steeper part of the curve is for the larger basin.

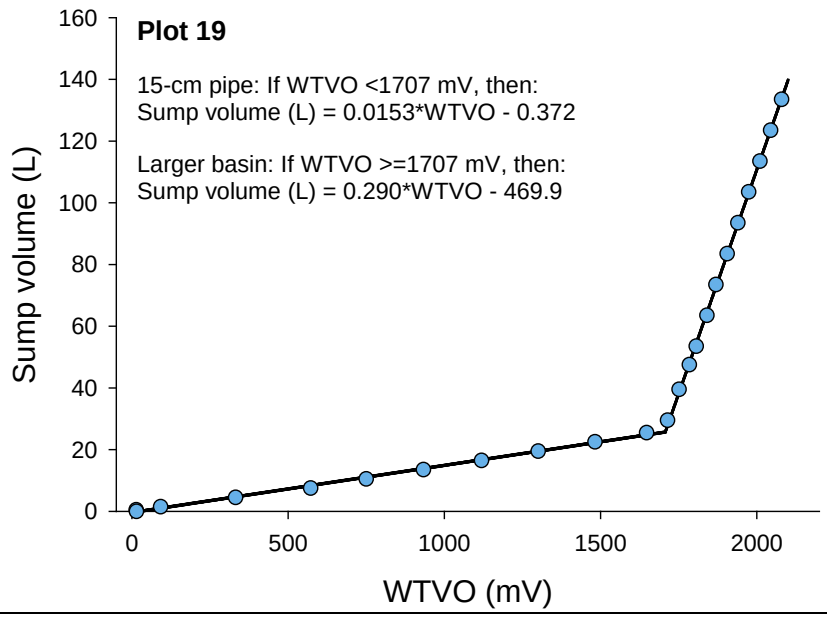

Initial calibrations were completed on 10/8/2015 and 11/24/2015:

<u>Sump 4</u>

15-cm pipe: If WTVO <1581 mV, then Sump volume (L) = 0.0157*WTVO + 0.716
Larger basin: If WTVO ≥1581 mV, then Sump volume (L) = 0.308*WTVO – 461.5

<u>Sump 6</u>

15-cm pipe: If WTVO <1574 mV, then Sump volume (L) = 0.0157*WTVO + 1.062
Larger basin: If WTVO ≥1574 mV, then Sump volume (L) = 0.288*WTVO – 428.3

<u>Sump 8</u>

15-cm pipe: If WTVO <1580 mV, then Sump volume (L) = 0.0153*WTVO + 0.098
Larger basin: If WTVO ≥1580 mV, then Sump volume (L) = 0.304*WTVO – 456.1

<u>Sump 10**</u>

15-cm pipe: If WTVO <1559 mV, then Sump volume (L) = 0.0161*WTVO + 0.743
Larger basin: If WTVO ≥1559 mV, then Sump volume (L) = 0.295*WTVO – 434.5

<u>Sump 11**</u>

15-cm: If WTVO <1600 mV, then Sump volume (L) = 0.0157*WTVO + 0.312
Larger basin: If WTVO ≥1600 mV, then Sump volume (L) = 0.296*WTVO – 448.4

<u>Sump 13**</u>

15-cm: If WTVO <1579 mV, then Sump volume (L) = 0.0147*WTVO + 0.233
Larger basin: If WTVO ≥1579 mV, then Sump volume (L) = 0.296*WTVO – 443.4

Sump 16
15-cm: If WTVO <1755 mV, then Sump volume (L) = 0.0149*WTVO – 0.792
Larger basin: If WTVO ≥1755 mV, then Sump volume (L) = 0.334*WTVO – 560.4

Sump 17
15-cm: If WTVO <1717 mV, then Sump volume (L) = 0.0144*WTVO – 0.413
Larger basin: If WTVO ≥1717 mV, then Sump volume (L) = 0.301*WTVO – 492.7

Sump 19
15-cm: If WTVO <1707 mV, then Sump volume (L) = 0.0153*WTVO – 0.372
Larger basin: If WTVO ≥1707 mV, then Sump volume (L) = 0.290*WTVO – 469.9

Sump 20
15-cm: If WTVO <1820 mV, then Sump volume (L) = 0.0142*WTVO + 0.343
Larger basin: If WTVO ≥1820 mV, then Sump volume (L) = 0.263*WTVO – 452.8

**After several sensor failures and replacements, calibrations were conducted again for 3 plots on 5/12/2016. The calibrations were only determined for the 15-cm PVC, not the larger sump basin.

Sump 10
15-cm pipe: Sump volume (L) = 0.0144*WTVO –1.150

Sump 11
15-cm pipe: Sump volume (L) = 0.0145*WTVO – 1.018

Sump 13
15-cm pipe: Sump volume (L) = 0.0158*WTVO – 0.805

References

Krassovski MB, JS Riggs, LA Hook, WR Nettles, PJ Hanson, TA Boden (2015), A comprehensive data acquisition and management system for an ecosystem-scale peatland warming and elevated CO_2 experiment, Geosci. Instrum. Method. Data Syst., 4(2), 203-213.

Appendix I

Field data form.

Volume Removed L	Volume Accumulated L	WTVO Omnilog mm	VO VoltMeter mV	DepthFromSumpTop WaterDepthSensor Inches	DepthFromSumpBottom WaterDepthSensor Inches	Notes

Enclosure #:_____ Date+ time: _____ Initials: _____

Notes

- "Volume accumulated" is the accumulated volume of water that was removed from the sump, calculated by adding the volume removed to the previous value in the volume accumulated column, or simply the volume that was removed in the first row.
- The "VO Voltmeter mV" column is the mV output from the WT-VO sensor.

Photo showing a volt meter with the positive probe connected to the height terminal on the WT-VO interface and the negative probe connected to the common terminal (GND) on the WT-VO interface. Sump 11.

Photo showing a WT-VO interface.

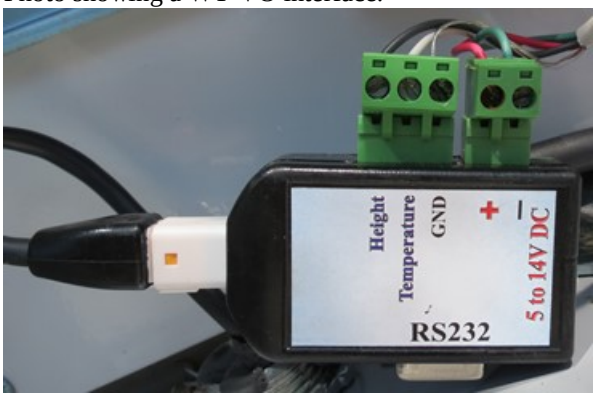

- The "DepthFromSumpBottom" column is calculated by subtracting the value in the "DepthFromSumpTop" column from the total depth to the bottom of the basin (15-cm ID PVC pipe).